MEGATECH SYSTEM

COMMERCIAL TRUCK & BUS SPARE PARTS

TECHNICAL DATA SHEET

REF ID: MT-003357

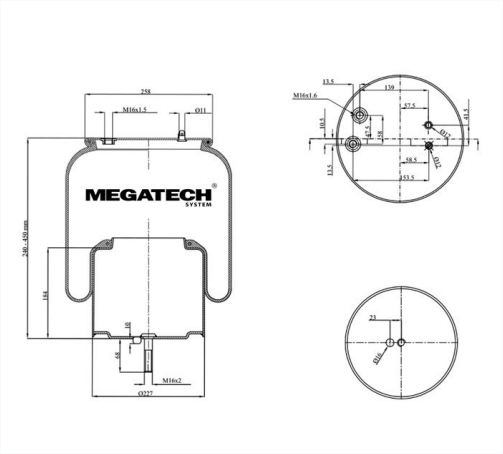

24933 K

AIR SPRING WITH METAL PISTON

PART STATUS:	Active OEM Replacement
CATEGORY:	Air Spring With Metal Piston
SYSTEM TYPE:	Commercial Vehicle / Heavy Fleet

OEM CROSS REFERENCE & VEHICLE COMPATIBILITY

VEHICLE / MAKE	OEM NUMBER
Firestone	W01-M58-8524
Firestone	W01-M58-8633
Phoenix	1 DF 23 G-1
Scania	1434933
Scania	1932593
Scania	2617887

BRAND / TYPE	CROSS REFERENCE NO.
FIRESTONE	1T17HR-8 W01 M58 8633