24933 K Air Spring With Metal Piston

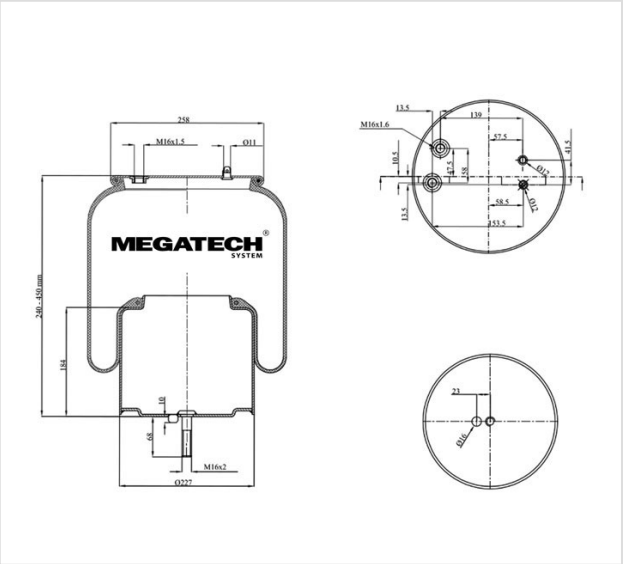

24933 K

Air Spring With Metal Piston

VEHICLE	OE
Scania	1434933
Scania	1932593
Scania	2617887
Firestone	W01-M58-8524
Firestone	W01-M58-8633