MEGATECH SYSTEM

COMMERCIAL TRUCK & BUS SPARE PARTS

TECHNICAL DATA SHEET

REF ID: MT-004303

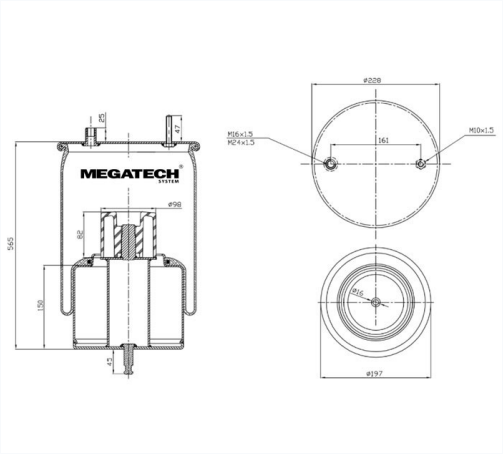

21857 K02

AIR SPRING WITH METAL PISTON

PART STATUS:	Active OEM Replacement
CATEGORY:	AIR SPRING WITH METAL PISTON
SYSTEM TYPE:	Commercial Vehicle / Heavy Fleet

OEM CROSS REFERENCE & VEHICLE COMPATIBILITY

VEHICLE / MAKE	OEM NUMBER
Volvo	21 321 515

BRAND / TYPE	CROSS REFERENCE NO.
Contitech	6630 N P02
Goodyear	1R11-851