MEGATECH SYSTEM

COMMERCIAL TRUCK & BUS SPARE PARTS

TECHNICAL DATA SHEET

REF ID: MT-004309

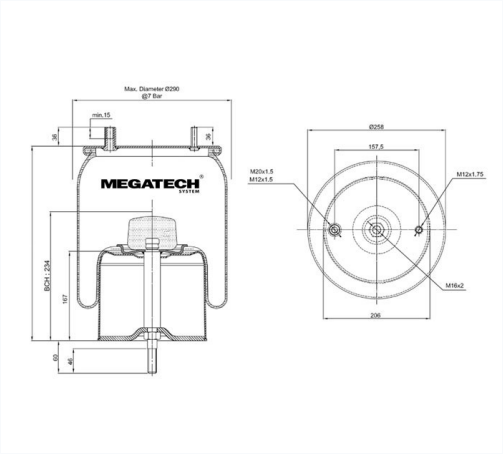

24007 K08

AIR SPRING WITH METAL PISTON

PART STATUS:	Active OEM Replacement
CATEGORY:	AIR SPRING WITH METAL PISTON
SYSTEM TYPE:	Commercial Vehicle / Heavy Fleet

OEM CROSS REFERENCE & VEHICLE COMPATIBILITY

VEHICLE / MAKE	OEM NUMBER
Gigant	00166294
Gigant	166294
Gigant	703012780

BRAND / TYPE	CROSS REFERENCE NO.
No cross-reference records available.	